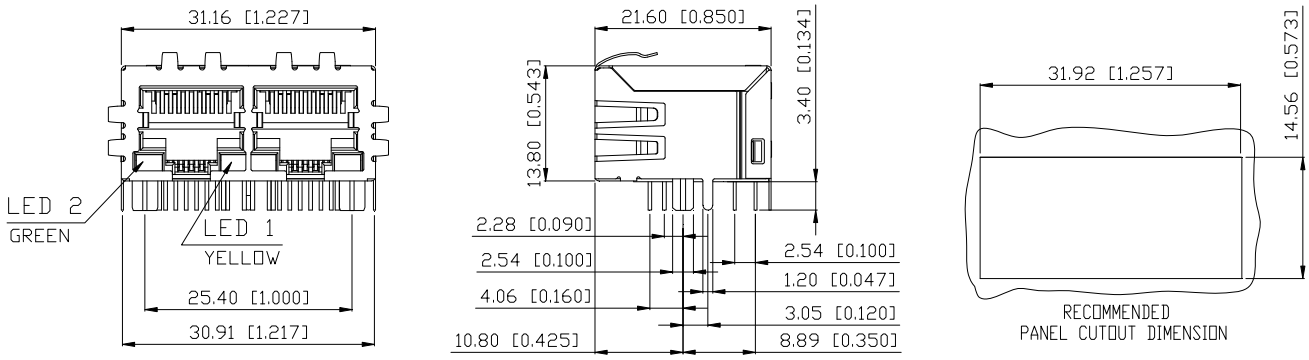

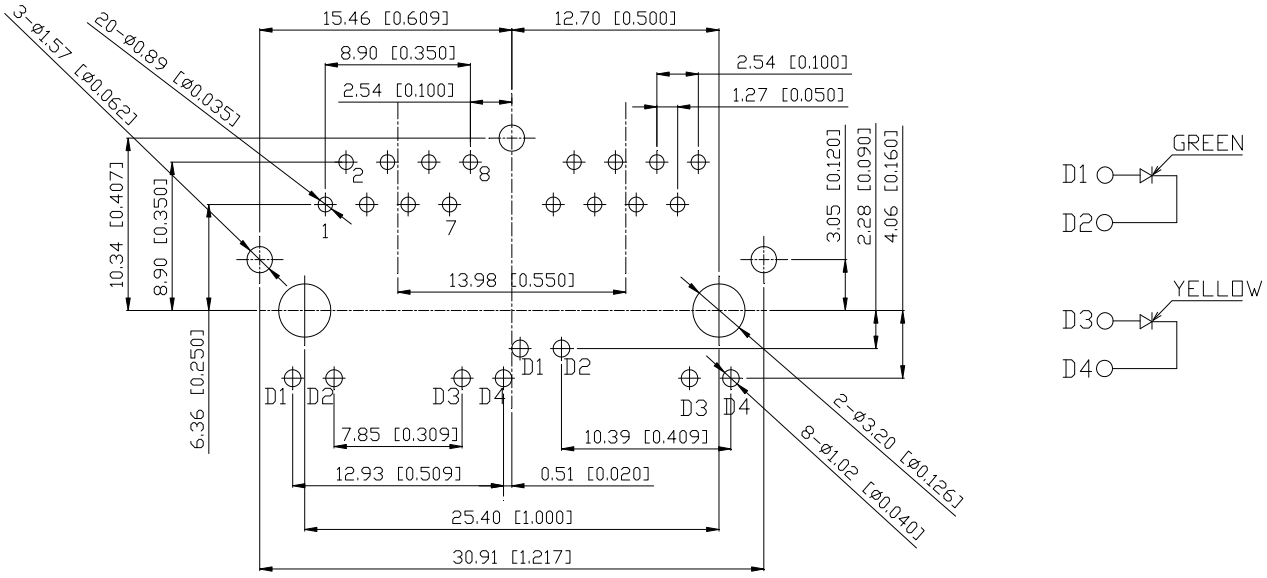

SUGGESTED PCB LAYOUT
(TOP VIEW)

ELECTRICAL SPECIFICATIONS @ 25°C+/-5°C unless otherwise noted:

Insertion Loss:	**1-100MHZ**	**-1.0dB MAX**
Return Loss:	**1-30MHZ**	**-16.0dB MIN**
	30-60MHZ	**-14.0dB MIN**
	60-80MHZ	**-10.0dB MIN**
Cross Talk:	**1-30MHZ**	**-40.0dB MIN**
	30-60MHZ	**-35.0dB MIN**
	60-80MHZ	**-30.0dB MIN**
CMR:	**1-100MHZ**	**-35.0dB MIN**
Hi-Pot:	**1500v AC 6S 1mA**	

OCL:350uH MIN @ 100KHZ 100mV 8mA DC

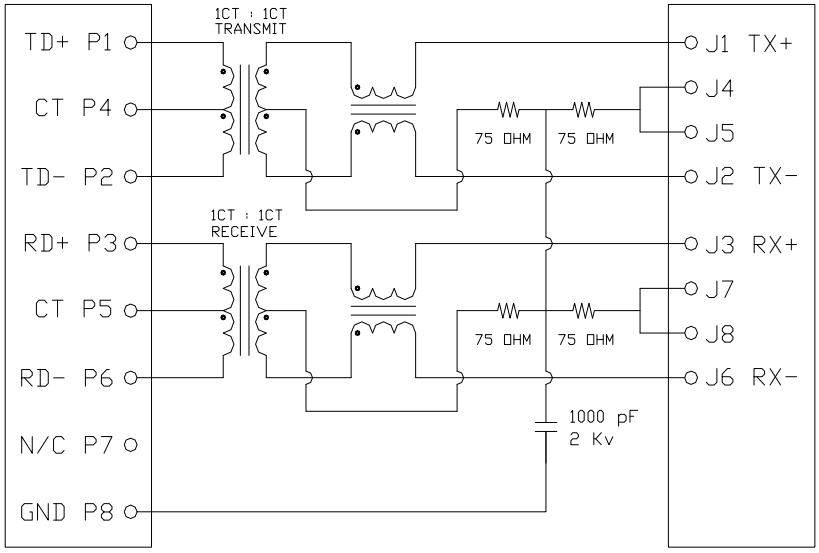

Contacts: 0.35mm thick phos bronze plated with 6u' gold in contact area

Turn Ratio: 1CT:1CT+/-3%

Operating temperature range:0°C to +70°C

Housing Material: PBT Black

Elecpart 友隆电子	**UNIT: mm** **.xx +/-0.25 .xxx +/-0.13**	**Approved By : Herman Au**	
	10/100BASE **1X2Tab-Down RJ45**	**P/N:HRJ-YL2B013S2015SNL**	**REV. A**
Drafted by CZ Lin		**Sheet 1 of 1**	